34447-MP

2 X 100W AUDIO AMPLIFIER MODULE

Compact Class “D” stereo amplifier using the
TDA7498 BTL (Bridge Tied Load) Chip.
Over temperature & Output Short protected.
4 Fixed Gain Selections: 21.6db, 27.6db, 31.1db & 33.1db
Min Impedance: 6 Ohm
S/N Ratio: 110db
Power Supply Volts: Max 36V with 6Ohm Load (100 + 100W)
Max 34V with 8Ohm Load (80 + 80W)
Power Supply Current: <6A Load Dependent
Audio Inputs: 3 Pin, 0.10” Pitch Header
Left & Right RCA Jacks
Onboard Volume Control Pot with Knob
Outputs: 2X Terminal strips
Power: Terminal strip
Power “ON” LED
L: 4-1/2” O/A **W:** 2-1/2” **H:** 1” O/A **WT:** .22

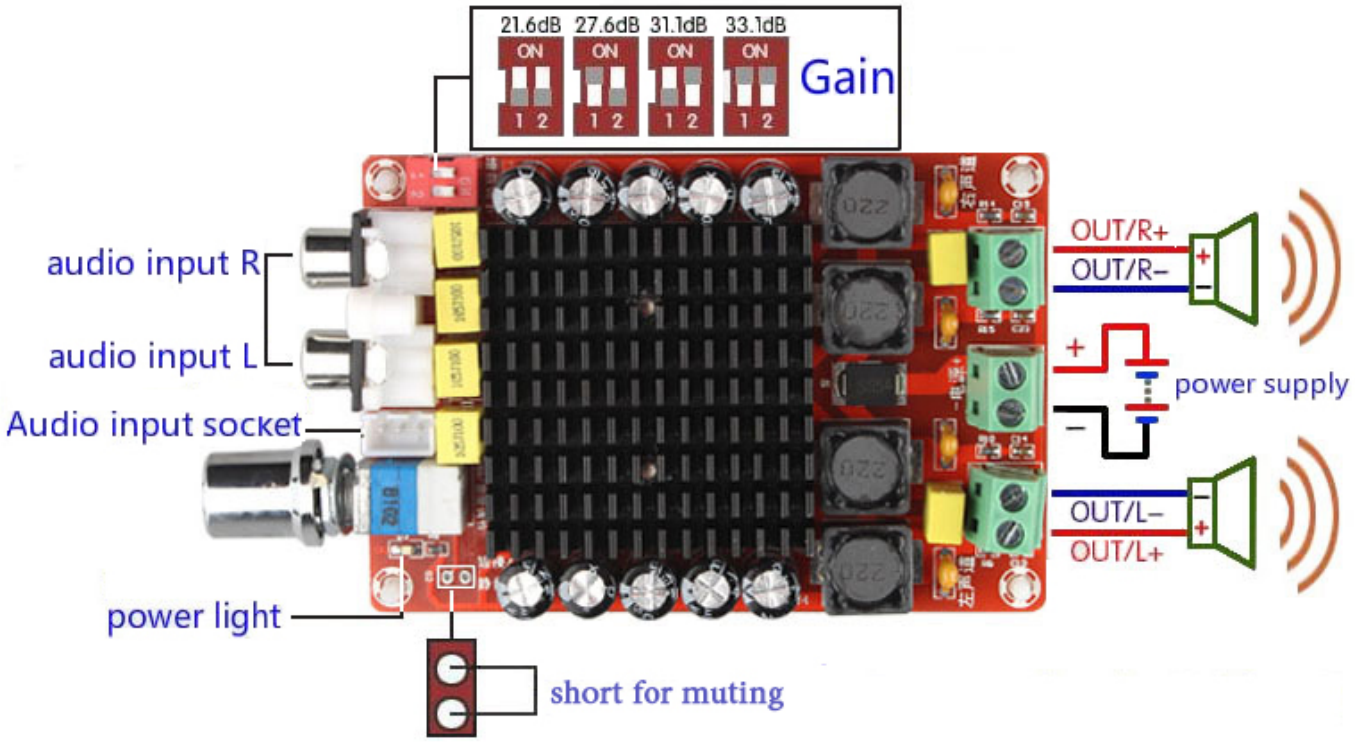

Information obtained from or supplied by Mpja.com or Marlin P. Jones and Associates inc. is supplied as a service to our customers and accuracy is not guaranteed nor is it definitive of any particular part or manufacturer. Use of information and suitability for any application is at users own discretion and user assumes all risk.

MARLIN P. JONES & ASSOC., INC.
P.O. Box 530400 Lake Park, Fl 33403
800-652-6733 FAX 561-844-8764
WWW.MPJA.COM