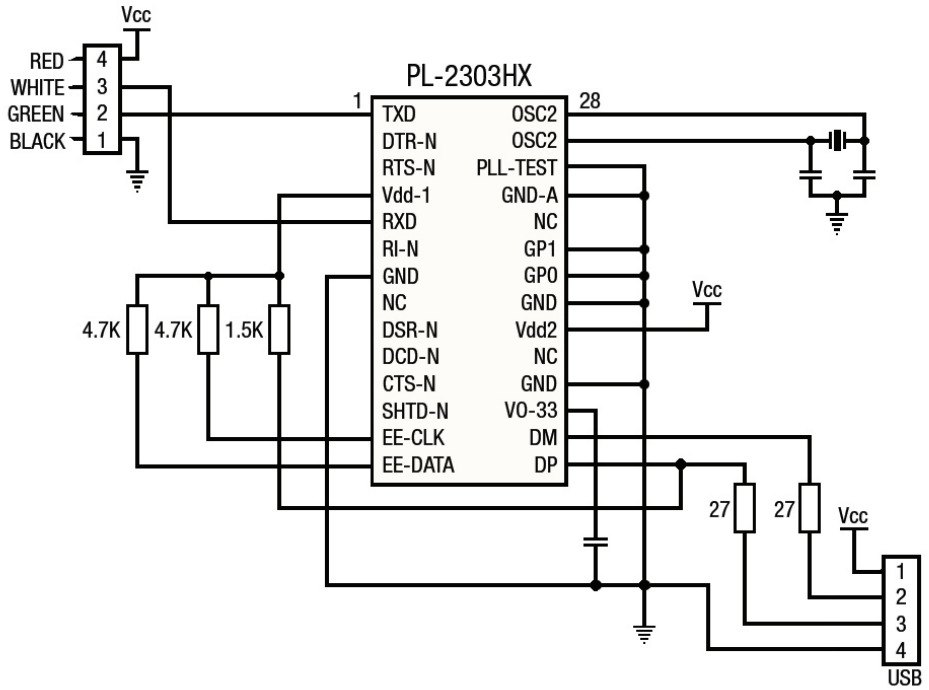

The Information contained herein is supplied as a service to our customers and accuracy is not guaranteed nor is it definitive of any particular part or manufacturer. Use of information and suitability for any application is at users own discretion and user assumes all risk.

Marlin P. Jones & Associates, Inc	
Title	TTL to USB CONVERTER CABLE
Size A	Document Number 33006-MP
Date: Monday, June 6, 2016	Sheet 1 of 1