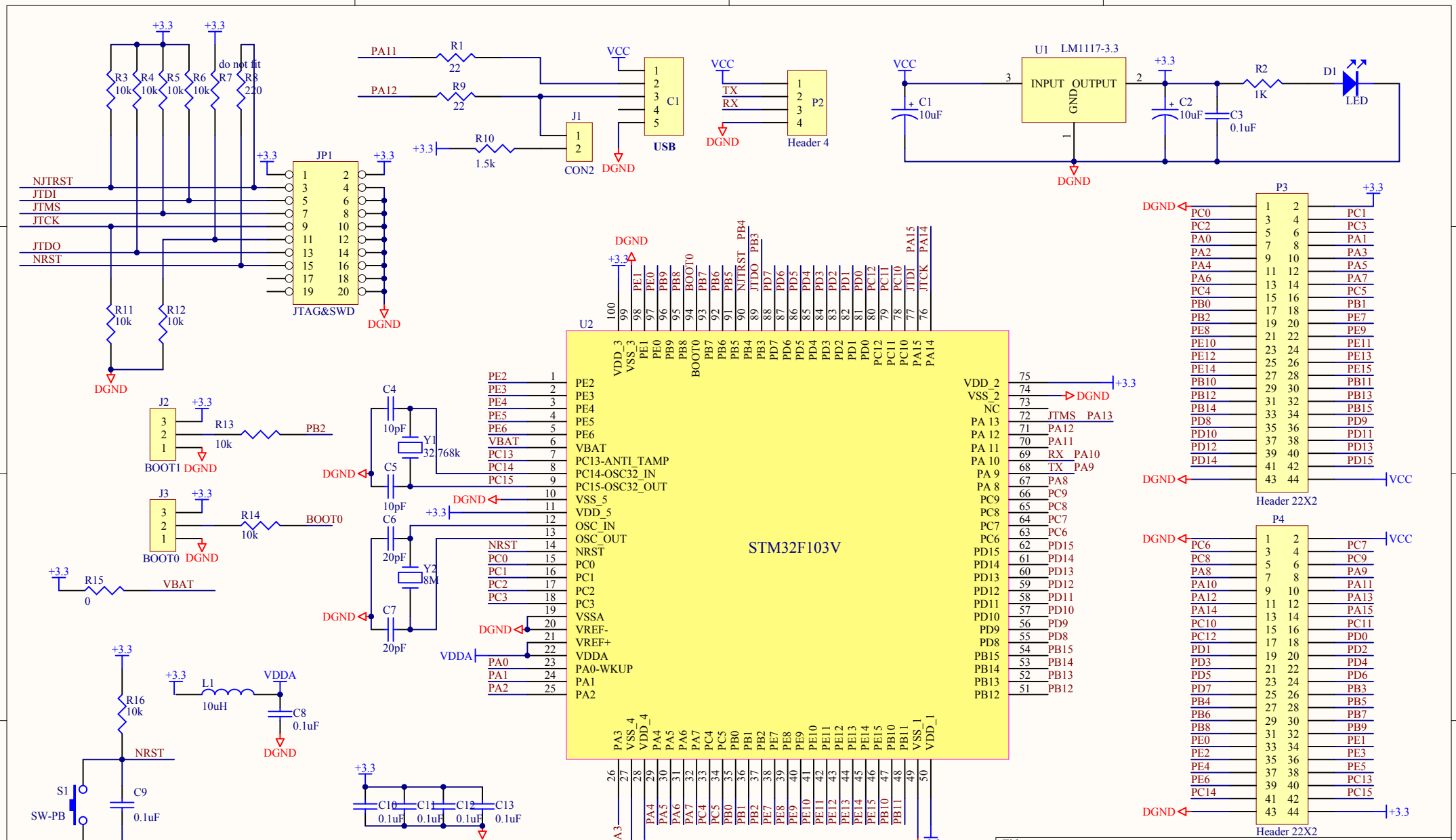

Title	ARM Core STM32F103VBT6 Board		
Size A4	Number 32691-MP		Revision 4/16
Date: 2014/5/8		Sheet of	
File:		DrawnBy:	