300W Single Output Series

- . High reliability
- . Built in fan speed control
- . 100% full load burn in test
- . Protections: over current / over voltage / over temperature / short circuit
- . 1 year warranty
- . F630 241 x 124 x 65(mm)

AC input voltage range ..... 90~130VAC
Input frequency ..... 50~60Hz
Inrush current ..... cold start, 40A/230V
Input leakage current ..... < 0.7mA/230VAC
Line regulation (full load) ..... <= 0.5%
Output voltage adjust range ..... + - 10%
Output over current protection ... 110~130% current limiting, auto recovery
Output over voltage protection ... 115-150%
Withstand voltage ..... I/P -O/P: 1.5KVAC/1min
..... I/P -F/G: 1.5KVAC/1min
..... O/P-F/G: 0.5KVAC/1min
Rise time ..... 50ms @ full load (typical)
Hold up time ..... 20ms @ full load (typical)
Operating temp. & humidity ..... -10°C ~ +50°C, 20%~90% RH (non condensing)
Storage temp. & humidity ..... -20°C ~ +85°C, 20%~95%RH (non condensing)
Cooling method ..... fan
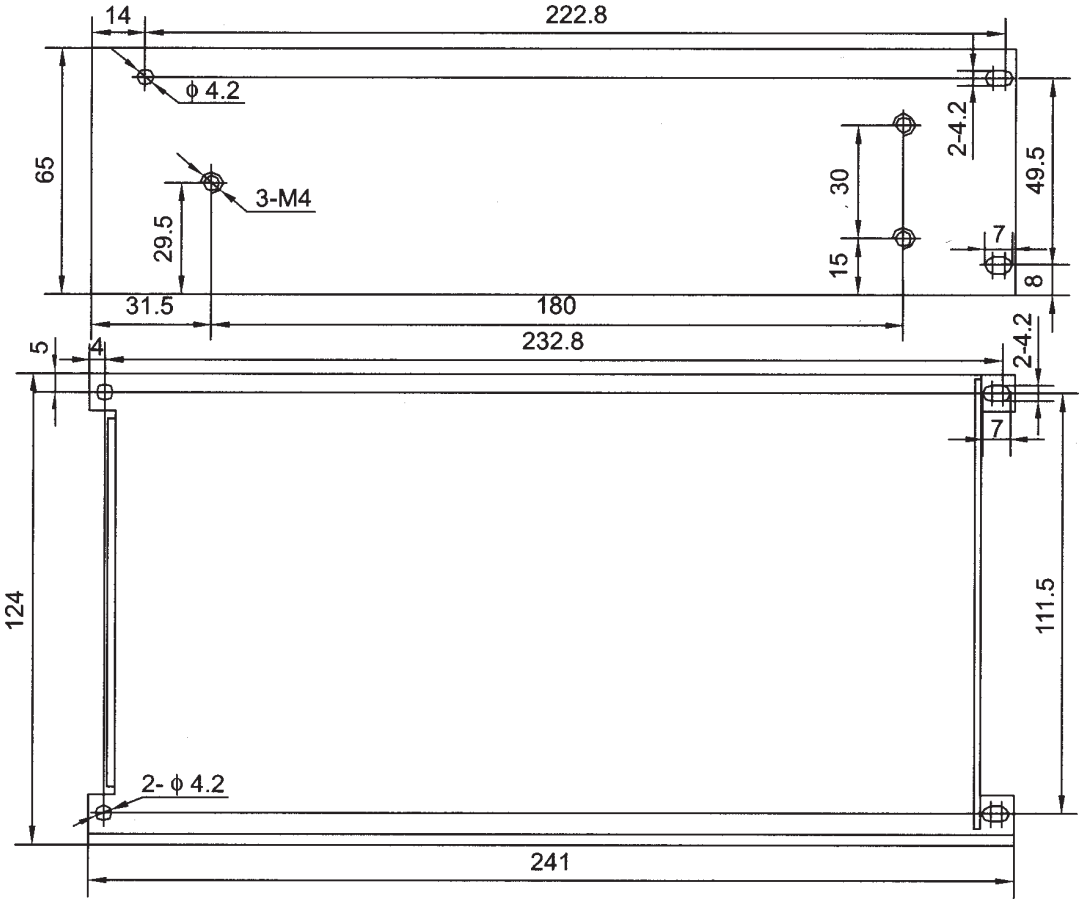
Model	DC Output		Load regul.	R&N	Effiency
HF300W-S-5	5V	60A	0.5%	100mV	76%
HF300W-S-9	9V	33A	0.5%	120mV	77%
HF300W-S-12	12V	25A	0.5%	120mV	83%
HF300W-S-24	24V	12.5A	0.5%	120mV	85%
HF300W-S-36	36V	8.5A	0.5%	120mV	85%
HF300W-S-48	48V	6.3A	0.5%	150mV	86%